FOME S.R.L.

CATALOG 14-2021

1971 - 2021 50 MADE IN ITALY

MANIFOLDS & ACCESSORIES FOR PUMPS SYSTEMS ZINC PLATED STEEL

Via Cal Resana 15/A 31028 Tezze di Piave (TV) Italy
Tel. 0039 0438 28446 Fax. 0039 0438 28760
info@fome.it www.fome.it

MADE IN ITALY

1971 FOME nasce dall'idea di due giovani imprenditori veneti, Bruno **Fo**rte e Attilio **Me**neghin.
Il nome dell'azienda è un acronimo dei cognomi dei fondatori. L'azienda inizia la propria attività in una vecchia stalla a Tezze di Piave (TV). L'attività principale è data da lavorazioni meccaniche di ripresa per conto terzi.

1980 Negli anni ottanta l'azienda inizia la propria produzione di articoli per belle arti in metallo, partecipando fin dal 1978 a fiere internazionali inizia l'espansione delle vendite nel mercato americano. Viene costruito il primo stabilimento produttivo nell'area che tuttora è occupata dall'azienda.

1990 Negli anni novanta l'azienda conosce un periodo di forte espansione, diversifica la propria produzione nel settore nautico e nella costruzione di componenti per impianti di aspirazione. Vengono create nuove aziende, acquisiti nuovi mercati e nuovi clienti. Vengono ulteriormente ampliati gli stabilimenti.

2000 Negli anni duemila i due soci fondatori decidono di dividere le aziende e la FOME rimane della famiglia Meneghin. L'azienda inizia la propria produzione di materiale per il settore del movimento acqua, focalizzandosi sulla produzione di collettori per gruppi di pompaggio in acciaio e acciaio inox.

2010 Negli anni del secondo decennio del nuovo millennio, nonostante la crisi globale, l'azienda investe in tecnologia e riesce ad aumentare il fatturato e il numero di addetti. Viene ampliato lo stabilimento produttivo ed entra nel mercato dei componenti per impianti di riscaldamento.

2021 L'azienda oggi si sviluppa su una superficie coperta di circa 7000m², conta una cinquantina di dipendenti e continua ad avere forte propensione per l'export. I continui investimenti in tecnologia permettono di trovare sempre nuovi metodi di produzione per rimanere nel mercato globale garantendo al cliente qualità e servizio con lo stesso entusiasmo di cinquant'anni fa.

1971 FOME was born from the idea of two young Venetian entrepreneurs, Bruno **Fo**rte and Attilio **Me**neghin. The company name is an acronym of the founders' surnames. The company began its business in an old stable in Tezze di Piave (TV) Italy. The main activity is given by mechanical work for third parties.

1980 In the eighties the company began its production in fine arts' articles in metal. The expansion of sales in The American's market helps the growth of the company. FOME joining international fairs since 1978. The first production plant was built in the area that still occupies the company.

1990 In the nineties the company experienced a period of strong expansion, diversifying its production in the boat field and in the construction of components for extraction systems. New companies are created, new markets and new customers are acquired. The factories are further expanded.

2000 In the 2000s the two founding partners decide to divide the companies and FOME remains of the Meneghin family. The company begins its production of material for the water movement sector, focusing on the production of manifolds for pumping groups, in steel and stainless steel.

2010 In the years of the second decade of the new millennium, despite the global crisis, the company invests in New technologies and manages to increase turnover and the number of employees.
The production plant is expanded, company start in the market of components for heating systems.

2021 The company today is spread over a covered area of 7000 m², employs about fifty people. A strong propensity for exports remain in the DNA of the company. Continuous investments in technology allow us to always find new one's production methods to stay in the global market by guaranteeing the customer quality and service with the same enthusiasm of fifty years ago.

PRODUCTS INDEX

PRODUCTS	PAGE
Delivery side manifolds 2pumps	4
Suction side manifolds 2 pumps	5
Delivery side manifolds 3pumps	6
Suction side manifolds 3 pumps	7
Vertical manifolds 2 pumps	8
Vertical manifolds 3 pumps	9
Baseplate for pumps group	10
Stand for electric board	11
Hook for electric board	11
Female caps for manifolds	12
Nipples	12
Threaded reductions	13
Blind flanges	13
Flange with welded female nipple	14
Flange with welded male nipple	14
Conical reduction	15

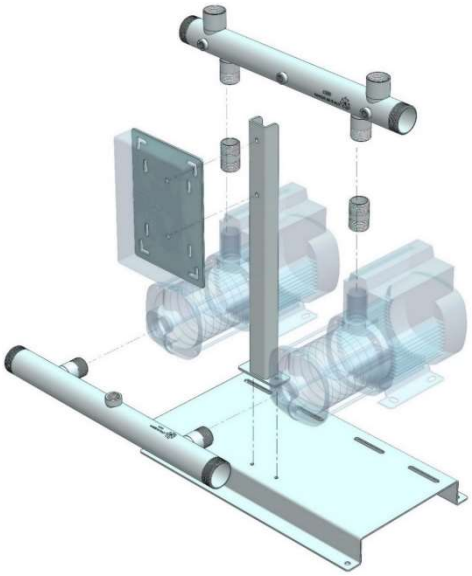

Management System ISO 9001:2015

TÜVRheinland CERTIFIED

www.tuv.com ID 9105010432

DELIVERY SIDE MANIFOLDS FOR 2 PUMPS - ZINC PLATED STEEL PN16

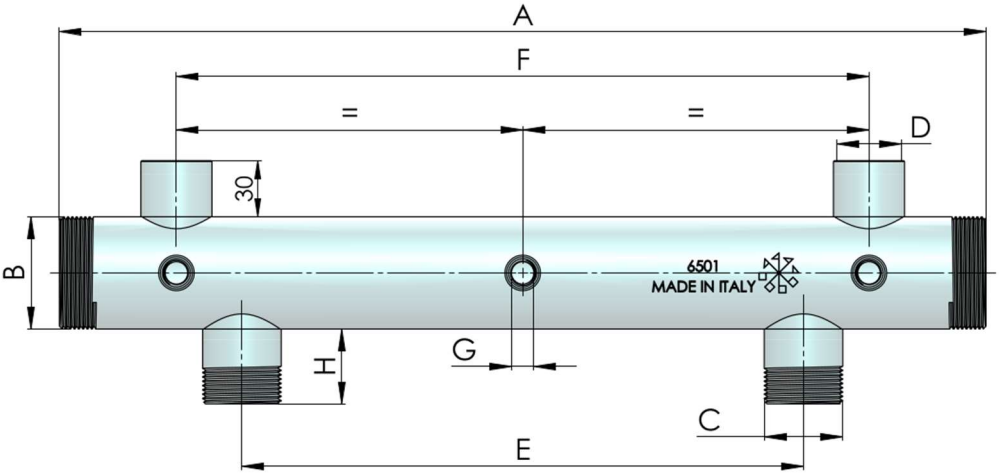

code	A (mm)	B (Ø)	C (G)	D (G)	E (mm)	F (mm)	G (G)	H (mm)	Weight (kg)
6500	500	1”1/2	1”	1”	300	370	¼”	40	1.90
6503	500	2”	1”	1”	300	370	¼”	40	2.30
6501	500	2”	1”1/4	1”	300	370	¼”	40	2.40
6505	500	2”	1”1/2	1”	300	370	¼”	40	2.40
6502	500	2”1/2	1”1/4	1”	300	370	¼”	40	2.90
6506	500	2”1/2	1”1/2	1”	300	370	¼”	60	3.00
6515	500	3”	2”	1”	300	370	¼”	40	3.60
6510	700	2”	1”1/4	1”	360	370	¼”	40	3.20
6511	700	2”	1”1/2	1”	360	390	¼”	40	3.20
6513	700	2”1/2	1”1/4	1”	360	390	¼”	40	4.00
6512	700	2”1/2	1”1/2	1”	360	390	¼”	60	4.20
6504	700	3”	2”	1”	360	390	¼”	40	4.90
6530	700	DN80	1”1/2	1”	360	370	¼”	60	11.90
6514	700	DN100	3”	1”	360	390	¼”	60	15.20

A	Length of manifold in mm
B	Dimension of main pipe, male threaded both sides.
C	umps’ connection, male threaded.
D	Pressure vessels’ connection, female sleeve.
E	Distance between pumps.
F	Distance between pressure vessels.
G	Female sleeves for instruments.

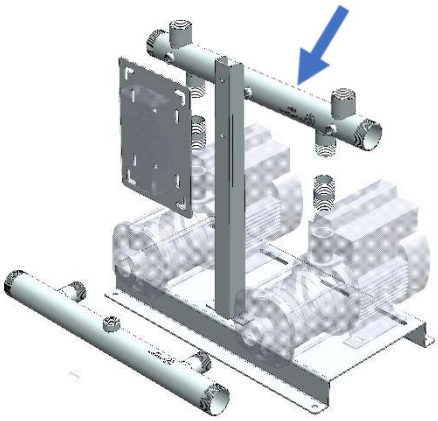

MATERIAL	Tube FE P11 DIN2394 EN10204 2.2 (weld, polish)
TUBE THICKNESS	3mm
THREADS	UNI EN ISO 228-1 cylindrical (DIN2999, BSPP)
SURFACE TREATMENT	Zinc plated UNI EN ISO 2081 Fe/Zn8/A

The information in this catalog may be modify by the company, request confirmation at the time of the order.
On request may be provided certificates of raw material, welding and test certification, ISO certification.

SUCTION SIDE MANIFOLDS FOR 2 PUMPS - ZINC PLATED STEEL PN16

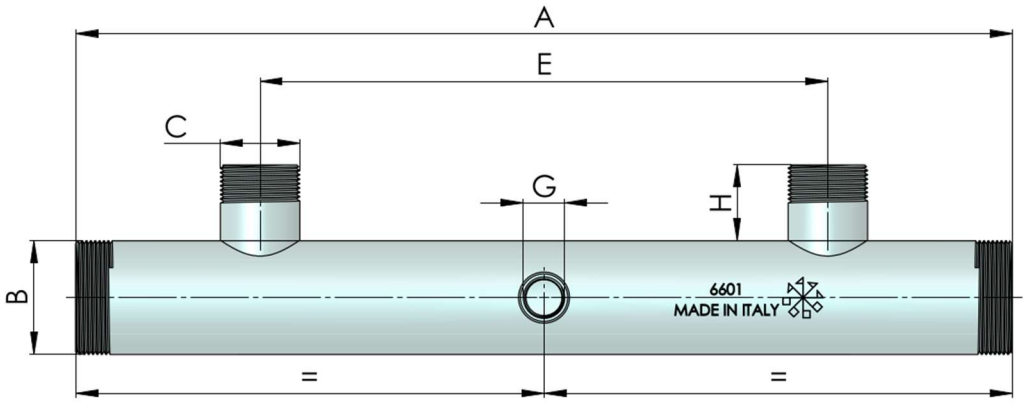

code	A (mm)	B (Ø)	C (G)	E (mm)	G (G)	H (mm)	Weight (kg)
6600	500	1”1/2	1”	300	½”	40	1.80
6603	500	2”	1”	300	½”	40	2.10
6601	500	2”	1”1/4	300	½”	40	2.20
6605	500	2”	1”1/2	300	½”	40	2.30
6609	500	2”1/2	1”1/4	300	½”	40	2.80
6602	500	2”1/2	1”1/2	300	½”	40	2.80
6604	500	3”	2”	300	½”	40	3.40
6606	700	2”	1”1/4	360	½”	40	3.05
6611	700	2”	1”1/2	360	½”	40	3.10
6613	700	2”1/2	1”1/4	360	½”	40	3.90
6612	700	2”1/2	1”1/2	360	½”	40	3.90
6610	700	3”	2”	360	½”	60	5.00
6630	700	DN80	2”	360	½”	60	15.00
6614	700	DN100	3”	360	½”	60	15.10

A	Length of manifold in mm
B	Dimension of main pipe, male threaded both sides.
C	Pumps’ connection, male threaded.
E	Distance between pumps.
G	Female sleeves for instruments.

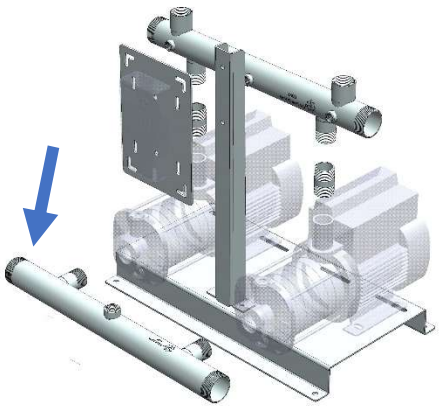

MATERIAL	Tube FE P11 DIN2394 EN10204 2.2 (weld, polish)
TUBE THICKNESS	3mm
THREADS	UNI EN ISO 228-1 cylindrical (DIN2999, BSPP)
SURFACE TREATMENT	Zinc plated UNI EN ISO 2081 Fe/Zn8/A

The information in this catalog may be modify by the company, request confirmation at the time of the order.
On request may be provided certificates of raw material, welding and test certification, ISO certification.

DELIVERY SIDE MANIFOLDS FOR 3 PUMPS - ZINC PLATED STEEL PN16

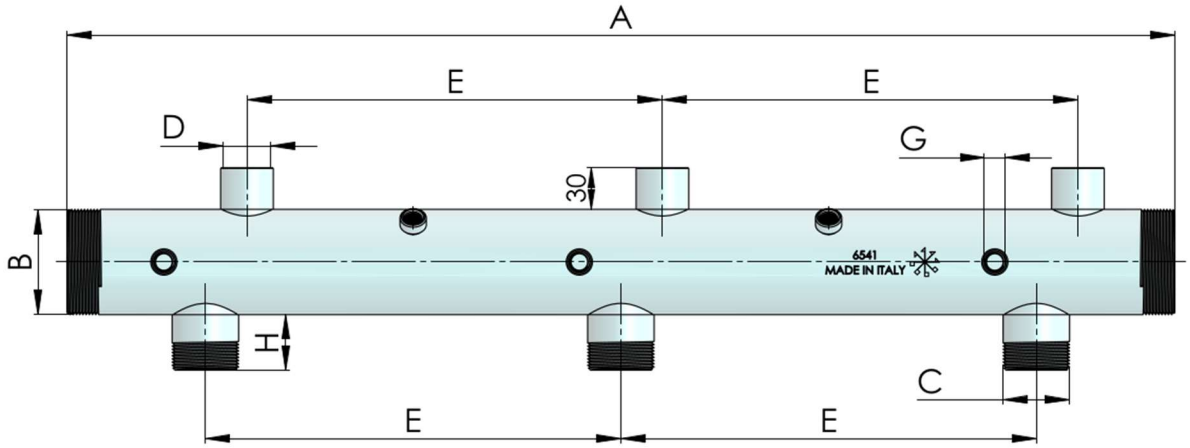

code	A (mm)	B (Ø)	C (G)	D (G)	E (mm)	G (G)	H (mm)	Weight (kg)
6542	800	2”	1”	1”	300	¼”	40	3.80
6540	800	2”	1”1/4	1”	300	¼”	40	3.90
6543	800	2”1/2	1”1/4	1”	300	¼”	40	4.80
6541	800	2”1/2	1”1/2	1”	300	¼”	40	5.00
6544	800	3”	2”	1”	300	¼”	60	6.20
6545	800	DN100	3”	1”	300	¼”	60	17.50
6546	1000	2”1/2	1”1/2	1”	360	¼”	40	5.80
6547	1000	3”	2”	1”	360	¼”	60	7.60
6548	1000	DN100	3”	1”	360	¼”	60	18.50

A	Length of manifold in mm
B	Dimension of main pipe, male threaded both sides.
C	Distance between pumps.
D	Pumps’ connection, male threaded.
E	Pressure vessels’ connection, female sleeve.
F	Female sleeves for instruments.

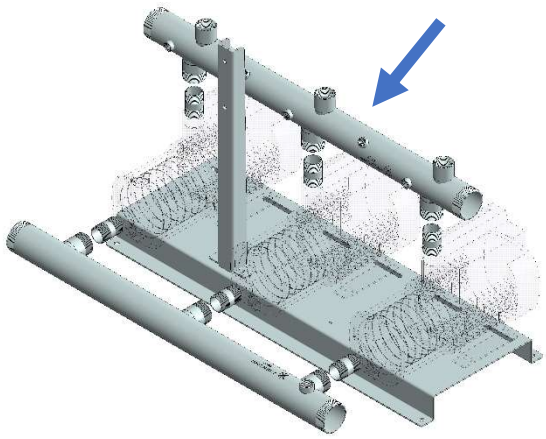

MATERIAL	Tube FE P11 DIN2394 EN10204 2.2 (weld, polish)
TUBE THICKNESS	3mm
THREADS	UNI EN ISO 228-1 cylindrical (DIN2999, BSPP)
SURFACE TREATMENT	Zinc plated UNI EN ISO 2081 Fe/Zn8/A

The information in this catalog may be modify by the company, request confirmation at the time of the order.
On request may be provided certificates of raw material, welding and test certification, ISO certification.

SUCTION SIDE MANIFOLDS FOR 3 PUMPS - ZINC PLATED STEEL PN16

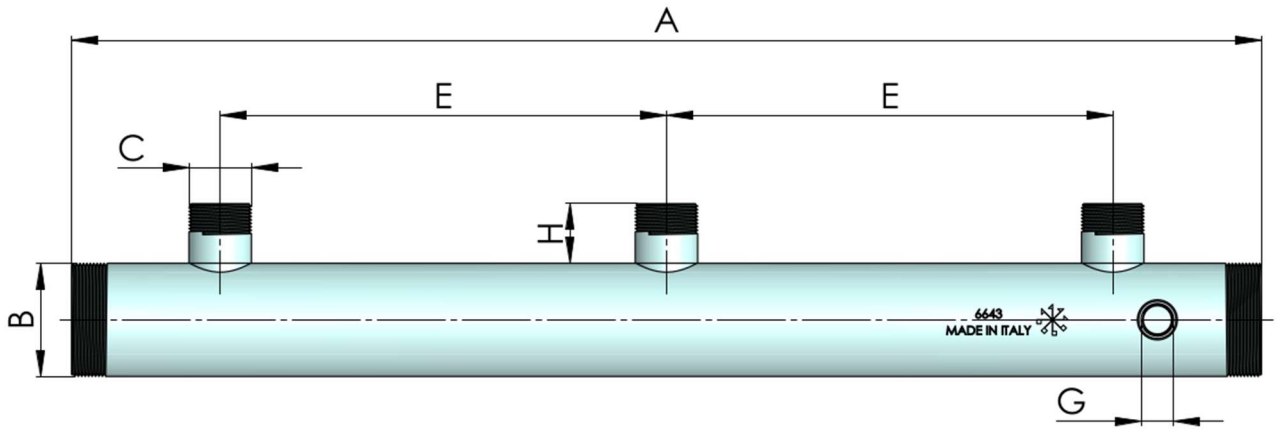

code	A (mm)	B (Ø)	C (G)	E (mm)	G (G)	H (mm)	Weight (kg)
6642	800	2”	1”	300	½”	40	3.50
6640	800	2”	1”1/4	300	½”	40	3.60
6643	800	2”1/2	1”1/4	300	½”	40	4.50
6641	800	2”1/2	1”1/2	300	½”	60	4.70
6644	800	3”	2”	300	½”	60	5.90
6645	800	DN100	3”	300	½”	60	17.10
6646	1000	2”1/2	1”1/2	360	½”	60	5.80
6647	1000	3”	2”	360	½”	60	7.30
6648	1000	DN100	3”	360	½”	60	18.10

A	Length of manifold in mm
B	Dimension of main pipe, male threaded both sides.
C	Distance between pumps.
D	Pumps’ connection, male threaded.
E	Female sleeves for instruments.

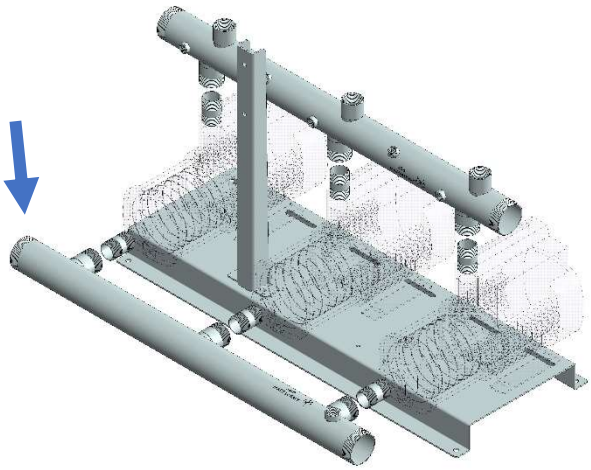

MATERIAL	Tube FE P11 DIN2394 EN10204 2.2 (weld, polish
TUBE THICKNESS	3mm
THREADS	UNI EN ISO 228-1 cylindrical (DIN2999, BSPP)
SURFACE TREATMENT	Zinc plated UNI EN ISO 2081 Fe/Zn8/A

The information in this catalog may be modify by the company, request confirmation at the time of the order.
On request may be provided certificates of raw material, welding and test certification, ISO certification.

VERTICAL MANIFOLDS FOR 2 PUMPS - ZINC PLATED STEEL PN16

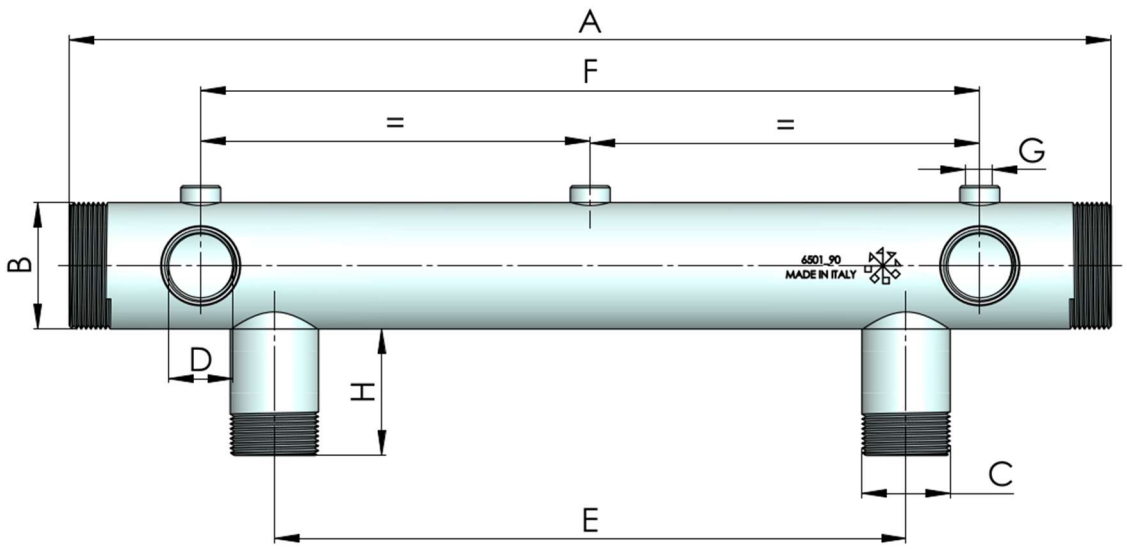

code	A (mm)	B (Ø)	C (G)	D (G)	E (mm)	F (mm)	G (G)	H (mm)	Weight (kg)
6500_90	500	1”1/2	1”	1”	300	370	1/4”	60	1.90
6503_90	500	2”	1”	1”	300	370	1/4”	60	2.30
6501_90	500	2”	1”1/4	1”	300	370	1/4”	60	2.40
6505_90	500	2”	1”1/2	1”	300	370	1/4”	60	2.40
6502_90	500	2”1/2	1”1/4	1”	300	370	1/4”	60	2.90
6506_90	500	2”1/2	1”1/2	1”	300	370	1/4”	60	3.00
6510_90	700	2”	1”1/4	1”	360	410	1/4”	60	3.20
6511_90	700	2”	1”1/2	1”	360	410	1/4”	60	3.20
6513_90	700	2”1/2	1”1/4	1”	360	390	1/4”	60	4.00
6512_90	700	3”	1”1/2	1”	360	390	1/4”	60	4.20
6504_90	700	3”	2”	1”	360	390	1/4”	60	4.90

A	Length of manifold in mm
B	Dimension of main pipe, male threaded both sides.
C	Pumps’ connection, male threaded.
D	Pressure vessels’ connection, female sleeve.
E	Distance between pumps.
F	Distance between pressure vessels.
G	Female sleeves for instruments.

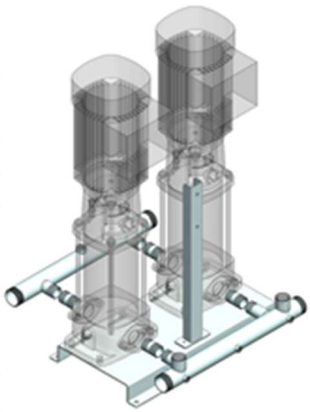

MATERIAL	Tube FE P11 DIN2394 EN10204 2.2 (weld, polish)
TUBE THICKNESS	3mm
THREADS	UNI EN ISO 228-1 cylindrical (DIN2999, BSPP)
SURFACE TREATMENT	Zinc plated UNI EN ISO 2081 Fe/Zn8/A

The information in this catalog may be modify by the company, request confirmation at the time of the order.
On request may be provided certificates of raw material, welding and test certification, ISO certification.

VERTICAL MANIFOLDS FOR 3 PUMPS - ZINC PLATED STEEL PN16

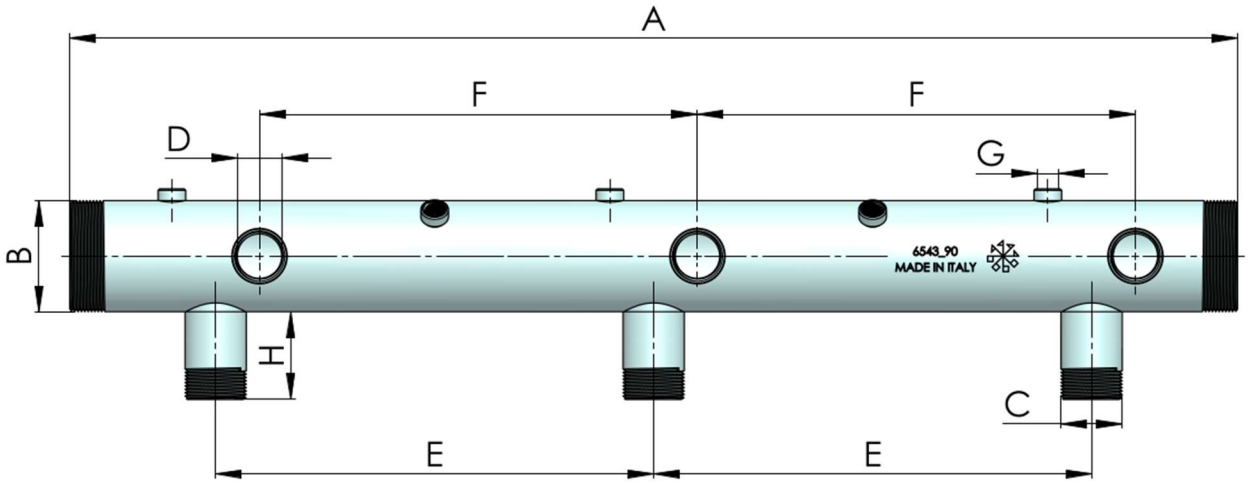

code	A (mm)	B (Ø)	C (G)	D (G)	E (mm)	F (mm)	G (G)	H (mm)	Weight (kg)
6542_90	800	2”	1”	1”	300	300	1/4”	40	3.80
6540_90	800	2”	1”1/4	1”	300	300	1/4”	60	3.90
6543_90	800	2”1/2	1”1/4	1”	300	300	1/4”	60	4.80
6541_90	800	2”1/2	1”1/2	1”	300	300	1/4”	60	5.00
6544_90	800	3”	2”	1”	300	300	1/4”	60	6.20
6546_90	1000	2”1/2	1”1/2	1”	360	300	1/4”	60	6.00
6547_90	1000	3”	2”	1”	360	300	1/4”	60	7.60

A	Length of manifold in mm
B	Dimension of main pipe, male threaded both sides.
C	Pumps’ connection, male threaded.
D	Pressure vessels’ connection, female sleeve.
E	Distance between pumps.
F	Distance between pressure vessels.
G	Female sleeves for instruments.

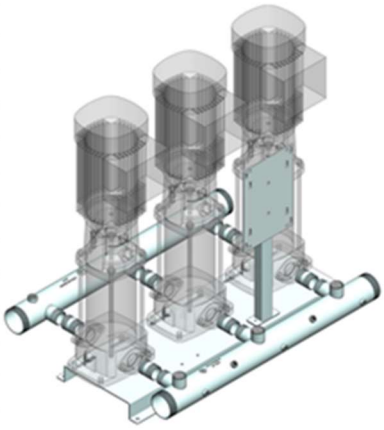

MATERIAL	Tube FE P11 DIN2394 EN10204 2.2 (weld, polish)
TUBE THICKNESS	3mm
THREADS	UNI EN ISO 228-1 cylindrical (DIN2999, BSPP)
SURFACE TREATMENT	Zinc plated UNI EN ISO 2081 Fe/Zn8/A

The information in this catalog may be modify by the company, request confirmation at the time of the order.
On request may be provided certificates of raw material, welding and test certification, ISO certification.

BASE PLATES FOR PUMPS SYSTEMS - ZINC PLATED

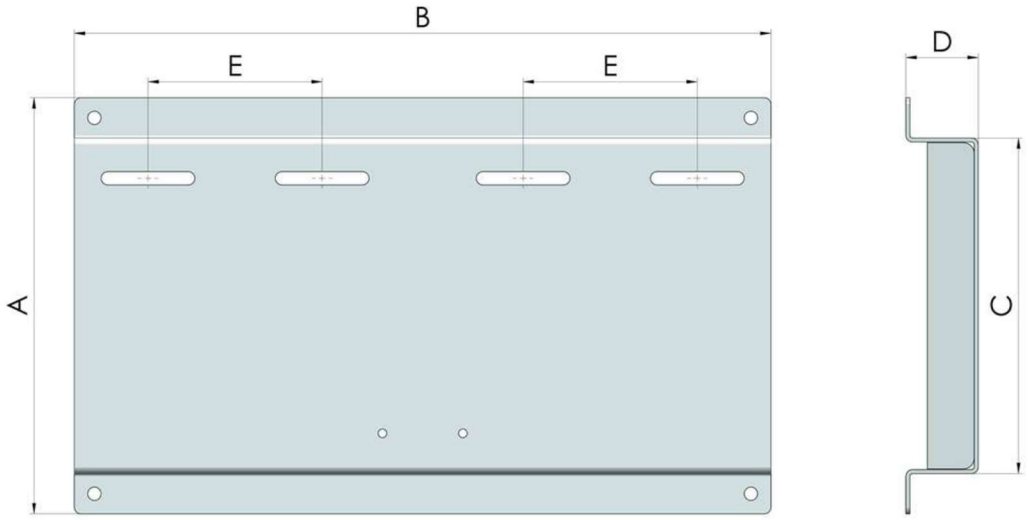

code	Description	A (mm)	B (mm)	C (mm)	D (mm)	E (mm)	Carrying capacity (KG)
6805	1 Pump	310	260	250	54	130	50
6800	2 Pumps	310	520	250	54	130	100
6802	2 Pumps	350	620	290	54	150	100
6813	2 Pumps	400	720	340	54	150	100
6803	3 Pumps	310	800	250	54	130	150
6806	3 Pumps	400	900	340	54	150	150
6804	4 Pumps	310	1080	250	54	130	200
6807	4 Pumps	400	1200	340	54	150	200

A	Width of base plate in mm.
B	Length of base plate in mm.
C	Width of the plane to fix the pump.
D	Hight of the base plate.
E	Center distance to fixing pumps.

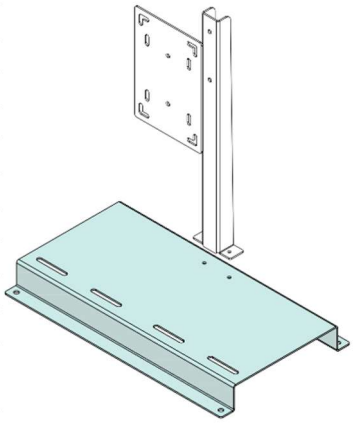

MATERIAL	FE 370
THICKNESS	3mm
SURFACE TREATMENT	Zinc plated UNI EN ISO 2081 Fe/Zn8/A

The information in this catalog may be modify by the company, request confirmation at the time of the order.
On request may be provided certificates of raw material, welding and test certification, ISO certification.

STAND AND HOOK FOR ELECTRIC PANEL - ZINC PLATED

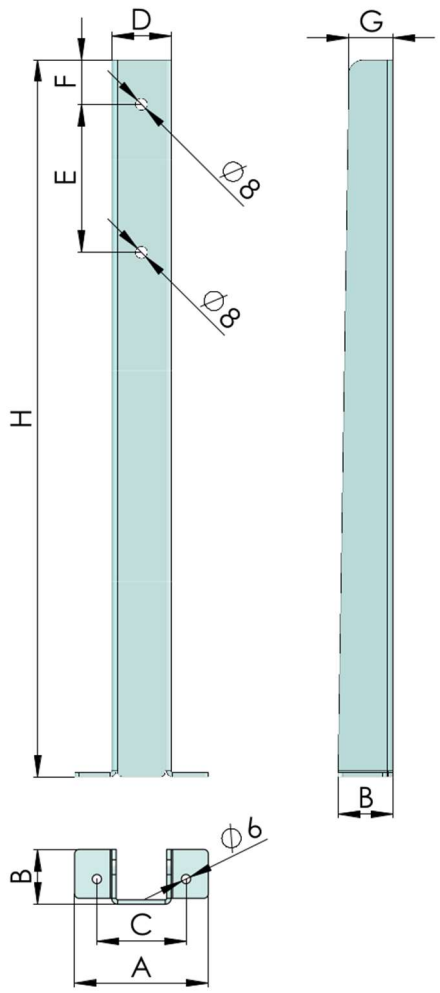

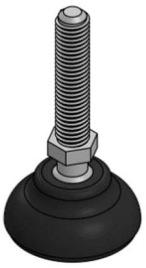

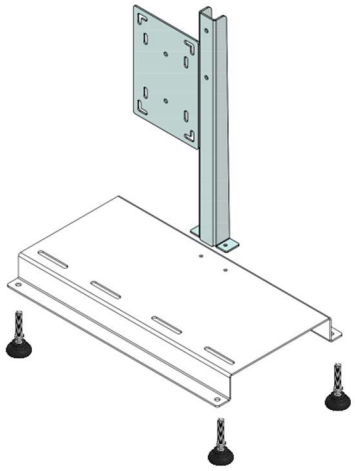

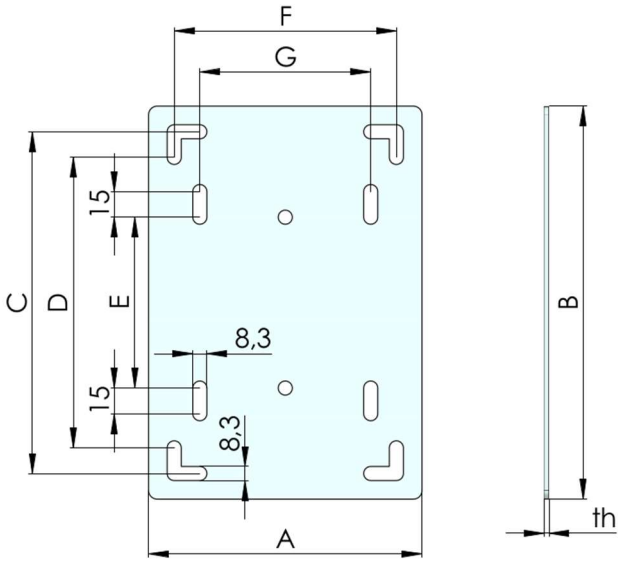

code	Description	A (mm)	B (mm)	C (mm)	D (mm)	E (mm)	F (mm)	G (mm)	H (mm)
6801	Stand for panel	90	37	60	40	100	30	30	484
6808	Stand for panel	90	37	60	40	100	30	30	800
6814	Stand for panel	90	37	60	40	100	30	30	1000
6809	Hook for panel	160	230	200	180	100	130	110	-
6810	Hook for panel	190	270	250	230	150	170	150	-
6811	Hook for panel	310	370	350	320	230	260	230	-
6812	4 feet antivibration	-	-	-	-	-	-	-	-

MATERIAL	FE 370
THICKNESS	3mm
SUPERFICIAL TREATMENTS	Zinc plated UNI EN ISO 2081 Fe/Zn8/A

The information in this catalog may be modify by the company, request confirmation at the time of the order.
On request may be provided certificates of raw material, welding and test certification, ISO certification.

FEMALE CUPS FOR MANIFOLDS – ZINC PLATED PN16

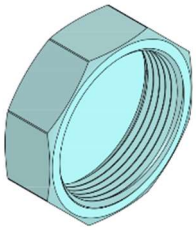

code	Description	Size
6750	Cup in avp zinc plated	G1”F
6751	Cup in avp zinc plated	G1”1/4F
6752	Cup in avp zinc plated	G1”1/2F
6753	Cup in avp zinc plated	G2”F
6754	Cup in cast iron zinc plated	G2”1/2F
6755	Cup in cast iron zinc plated	G3”F

The information in this catalog may be modify by the company, request confirmation at the time of the order.
On request may be provided certificates of raw material, welding and test certification, ISO certification.

NIPLES - ZINC PLATED PN16

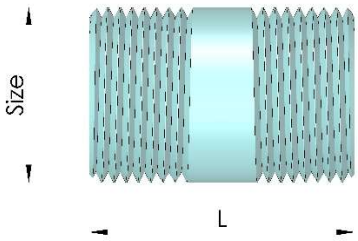

code	Description	Size	Lenght
6770	Niplo FE zinc plated	G1”M	50mm
6771	Niplo FE zinc plated	G1”1/4M	50mm
6772	Niplo FE zinc plated	G1”1/2M	70mm
6773	Niplo FE zinc plated	G2”M	70mm
6774	Niplo FE zinc plated	G2”1/2M	70mm

The information in this catalog may be modify by the company, request confirmation at the time of the order.
On request may be provided certificates of raw material, welding and test certification, ISO certification.

THREADED REDUCTION - ZINC PLATED PN16

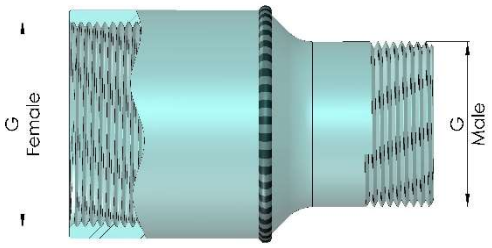

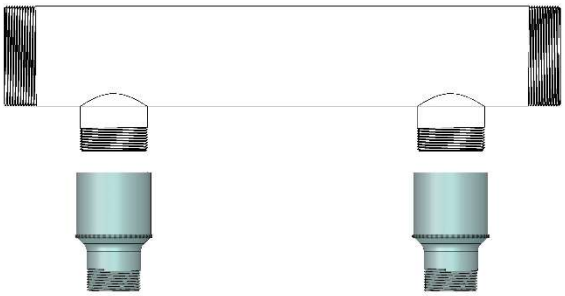

code	Description	Female size	Male size
6775	Treaded connection	1”1/4	1”
6776	Treaded connection	1”1/2	1”1/4
6777	Treaded connection	2”	1”1/2
6778	Treaded connection	2”1/2	2”

The information in this catalog may be modify by the company, request confirmation at the time of the order.
On request may be provided certificates of raw material, welding and test certification, ISO certification.

BLIND FLANGES - ZINC PLATED PN16

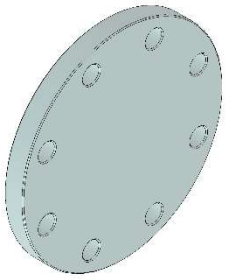

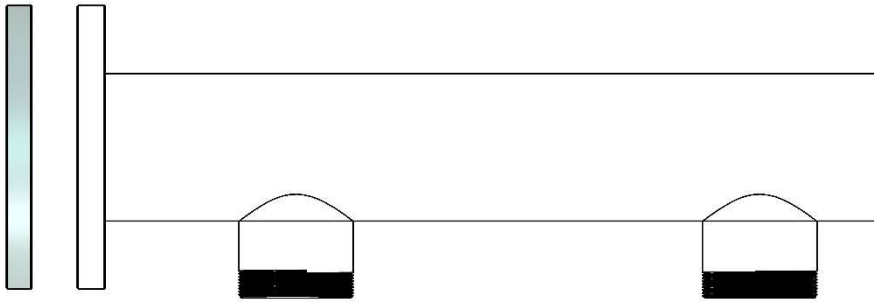

code	Description	Size	rating
6756	Blind flange	DN 50	PN16
6757	Blind flange	DN 65	PN16
6758	Blind flange	DN 80	PN16
6759	Blind flange	DN 100	PN16

The information in this catalog may be modify by the company, request confirmation at the time of the order.
On request may be provided certificates of raw material, welding and test certification, ISO certification.

MALE FLANGES - ZINC PLATED PN16

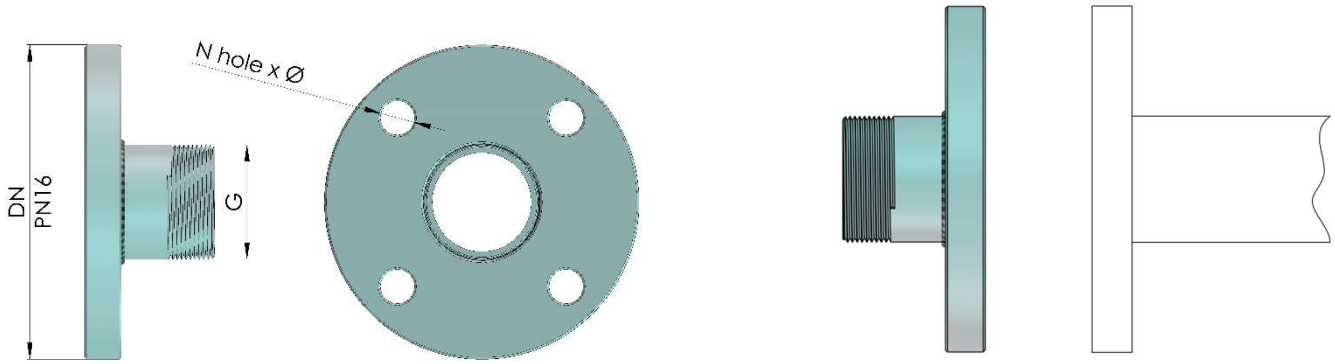

code	Description	Size	rating
6760	Flange with welded male nipple	DN 50	PN16
6761	Flange with welded male nipple	DN 65	PN16
6762	Flange with welded male nipple	DN 80	PN16
6763	Flange with welded male nipple	DN 100	PN16

The information in this catalog may be modify by the company, request confirmation at the time of the order.
On request may be provided certificates of raw material, welding and test certification, ISO certification.

FEMALE FLANGES - ZINC PLATED PN16

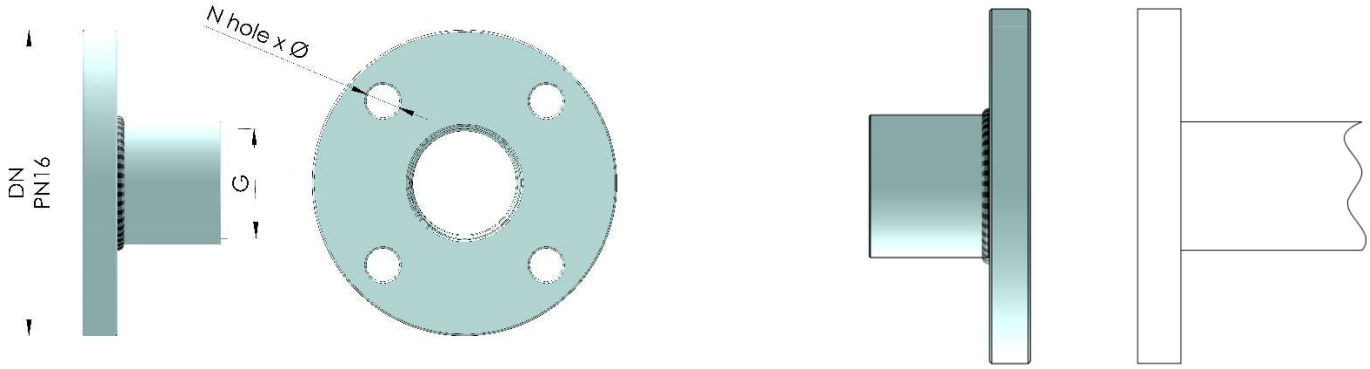

code	Description	Size	rating
6764	Flange with welded female nipple	DN 50	PN16
6765	Flange with welded female nipple	DN 65	PN16
6766	Flange with welded female nipple	DN 80	PN16
6767	Flange with welded female nipple	DN 100	PN16

The information in this catalog may be modify by the company, request confirmation at the time of the order.
On request may be provided certificates of raw material, welding and test certification, ISO certification.

CONICAL REDUCTION UNI EN 12845 - ZINC PLATED PN16

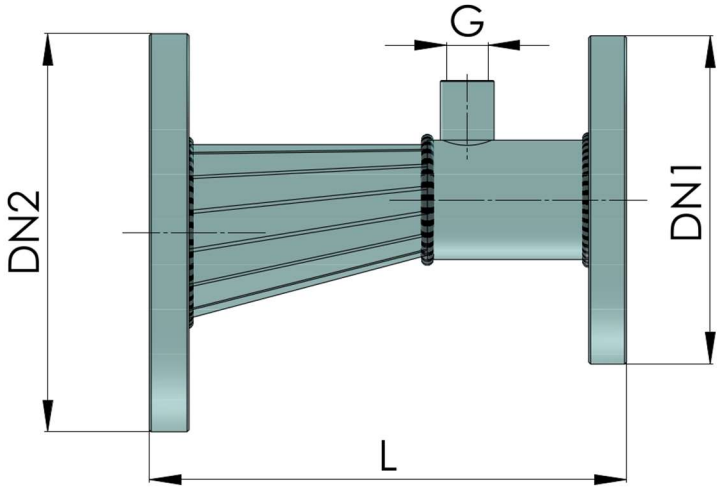

code	Description	DN1	DN2	G	L
6700	Conical reduction with extension	DN50	DN80	½”	240mm
6701	Conical reduction with extension	DN100	DN65	½”	273mm

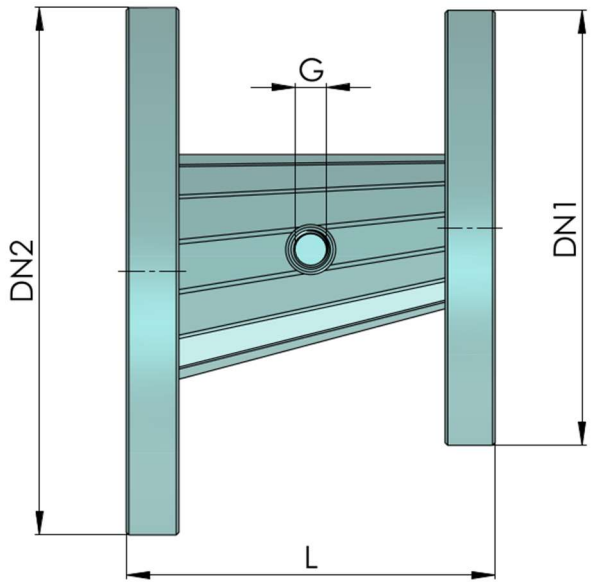

code	Description	DN1	DN2	G	L
6712	Conical reduction	DN40	DN65	½”	135mm
6711	Conical reduction	DN65	DN50	½”	140mm
6710	Conical reduction	DN80	DN50	½”	140mm
6709	Conical reduction	DN100	DN65	½”	185mm

The information in this catalog may be modify by the company, request confirmation at the time of the order.
On request may be provided certificates of raw material, welding and test certification, ISO certification.

General sale conditions

Order: We reserve the right to accept or not the orders received.

Transport: Ex-works, shipment of the goods under customer's responsibility.

Packaging: As above.

Payment: Against documents, if there aren't any particular conditions. For every delayed payment or every other problem, we debit the charges.

Return of Goods: We accept goods back only with our authorization.

Guarantee: The guarantee conditions are in accordance with D.Lsg. n. 24 del 02/02/2002.

Complaint: complains must be received within 5 days from the receipt of the goods.

For any controversy, the competent law court is the one in Conegliano Veneto (TV) Italy.

Delivery: 60 days from the order, before if it is possible.

FO.ME.s.r.l.
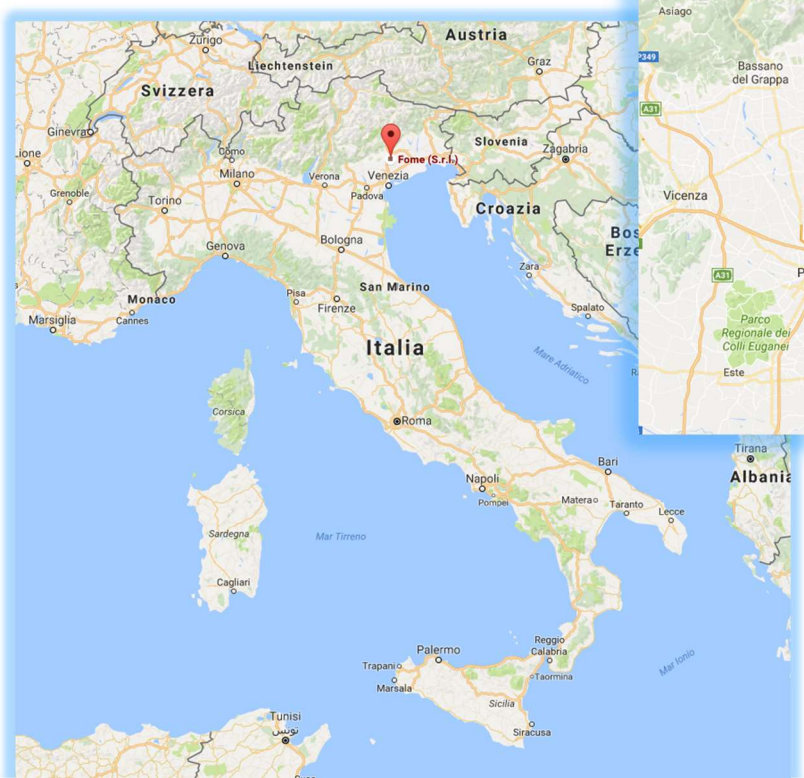
Via Cal Resana 15A, 31028 Tezze di Piave, Vazzola, Treviso, Italy.
tel. +39 0438 28446 - fax. +39 0438 28760 - info@fome.it - **www.fome.it**